GRYFIT

FIRE SAFETY

air handling intelligence

Fire Damper

CX-5

in libraries of

Fluid Desk
Building Engineering Solutions

EI 120 (v_e-h_o-i↔o) S

EN 13501-3+A1:2010
EN 15650:2010

Certificate of Constancy of Perfomance

CE **1488-CPD-0280/W**

open in PartShelf24

GRYFIT NET

FUNCTION

The CX-5 fire dampers are designed for buildings where in the event of a fire the affected zone should be isolated from the other zones, by among others, closing fire dampers, while the ventilation and air conditioning systems should operate normally in the other non-affected zones of the building. The performance criteria are satisfied in case of fire from inside to outside as well as outside to inside or both, respectively.

APPLICATION

The CX-5 fire dampers installation is allowed within a duct passing through a vertical and horizontal building partition or directly in building partition. Once the blade of the damper has been closed, the fire-affected zone is isolated - fire resistance of partition is maintained what prevents the spread of fire into the adjoining compartments. Fire damper closes as a result of rise in temperature in ventilation duct above 72°C or 95°C and activation of fuse or by control signal transmitted from the fire alarm control panel if damper is equipped with remote control mechanism.

DESCRIPTION

The CX-5 consists of:
– circular casing made of galvanized steel sheet alternatively stainless or acid proof steel,
– movable damper blade made of fire resistant board,
– combination of smoke and fire proof seals of damper blade,
– control mechanism and optional EMS module enabling fire damper assessment with the TZ tester,
– optional access door provided with a gasket and a cover with quick clamp lever.

SELECTION & DIMENSION

HYDRAULIC AND ACOUSTIC CHARACTERISTICS

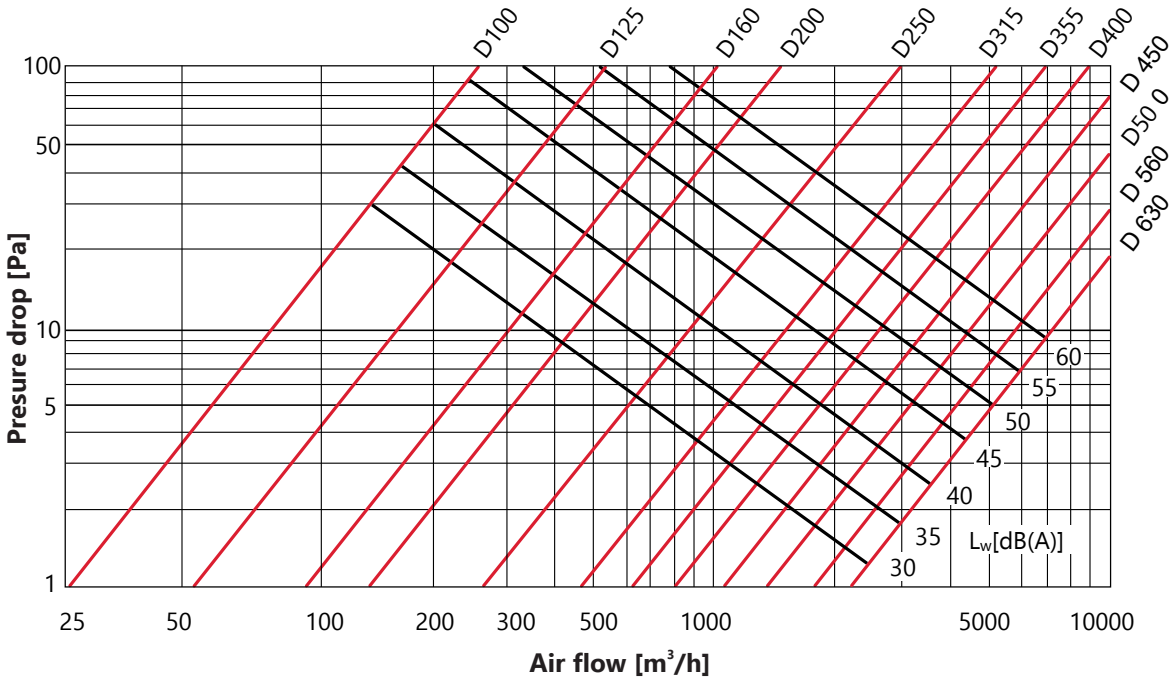

DIMENSIONS

Table of dimensions for brick or concrete partition wall G=110 mm

D [mm]	P [mm]	B [mm]	Weight [kg]	S [dm²]
100	350	-	5	0,48
125	350	-	6	0,83
160	350	-	7	1,50
200	390	-	7	2,15
250	450	-	8	3,67
315	450	9	9	6,23
355	450	28	10	8,13
400	450	51	11	10,58
450	450	75	13	12,67
500	450	100	15	17,15
560	450	130	17	21,84
630	450	165	19	28,04

D=200-630 mm

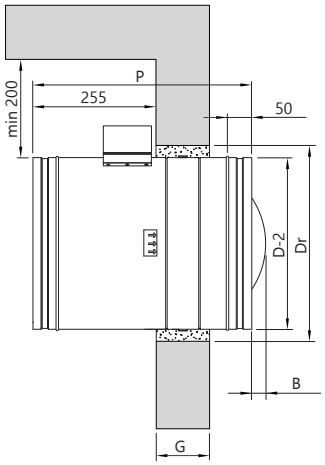

It is possible to order a damper with a non-standard casing length from the range:

$P_{standard} < P_{required} < 1040$ mm

SELECTION

GRYFIT CX-5 D100-D160

Damper with FDG-WT-5 actuator

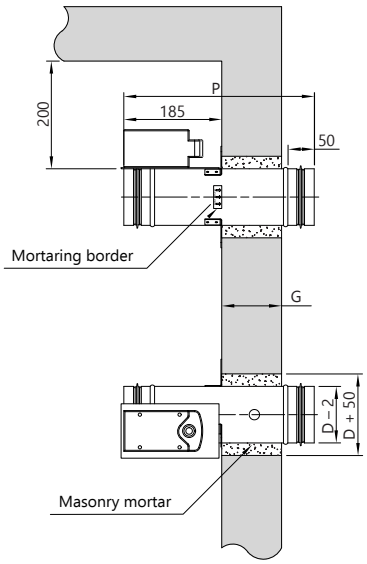

Damper with FDG-WT-8 actuator

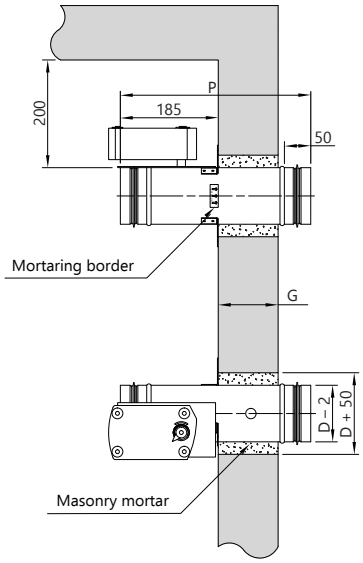

Optional position of the actuator

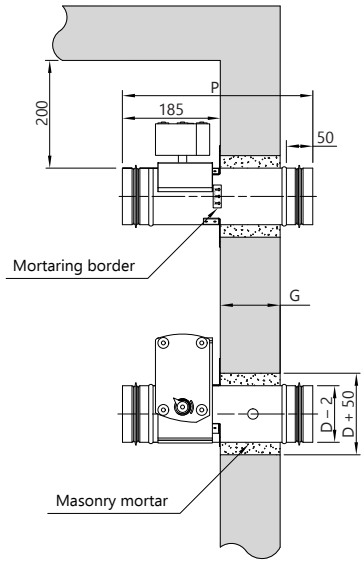

Attention: Optional position of actuator should be specified as: "actuator - 90 degrees".

GRYFIT CX-5 D200

Damper with FDG-WT-5 actuator

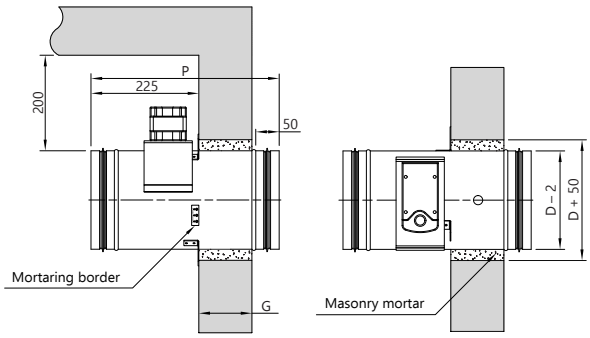

Damper with FDG-WT-8 actuator

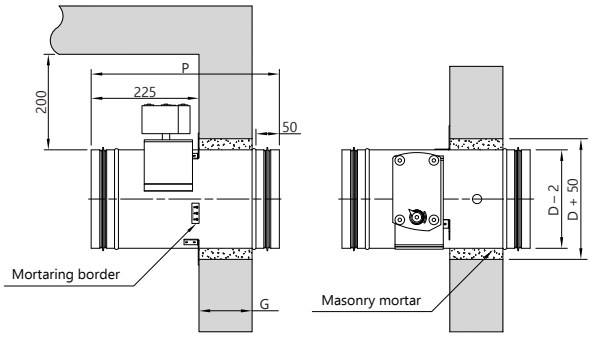

GRYFIT CX-5 D250-D630

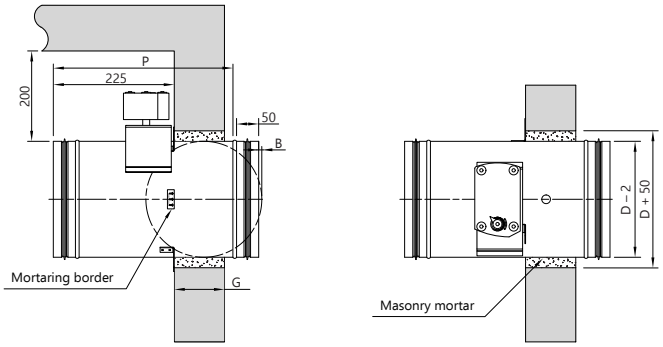

DIMENSIONS AND INSTALLATION METHOD

DAMPER INSTALATION IN A BRICK OR A CONCRATE WALL

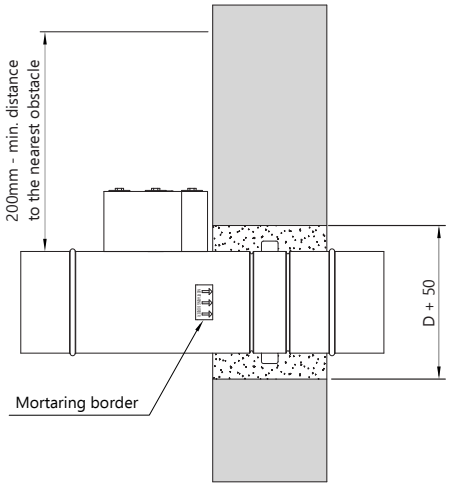

Minimum installation opening:
Dr = D + 50 mm

Mortaring border:
– is clearly marked by the label on the casing,
– damper blade should align with the center line of the partition wall's thickness (for construction elements of 110 mm thickness),
– if mortaring in wall the „mortaring border" marking onthe fire damper must be strictly observed.

The GRYFIT CX-5 fire damper can be installed with its blade axis positioned horizontally as well as vertically.

DAMPER INSTALATION IN A LIGHT – WEIGHT PARTITION WALL

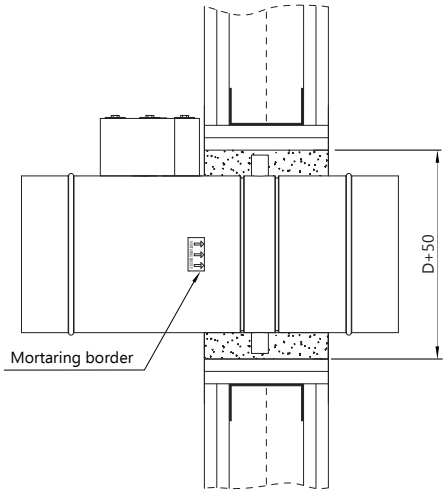

Minimum installation opening:
Dr = D + 50 mm

Mortaring border:
– is clearly marked by the label on the casing,
– damper blade should align with the center line of the partition wall's thickness (for construction elements of 125 mm thickness),
– if mortaring in wall the „mort aring border" marking on the fire damper must be strictly observed.

The GRYFIT CX-5 fire damper can be installed with its blade axis positioned horizontally as well as vertically.

DAMPER INSTALATION IN PARTITION HORIZONTAL

Mechanism above horizontal partition

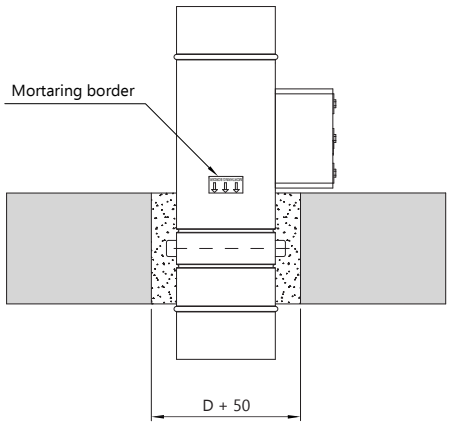

Mechanism below horizontal partition

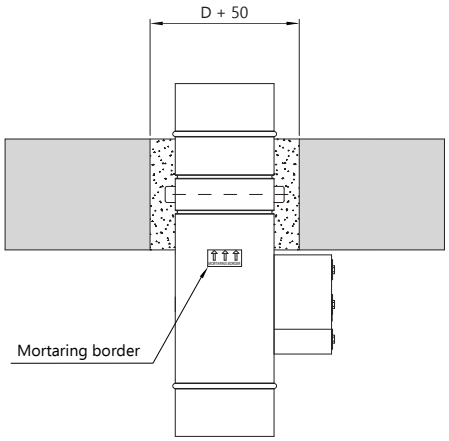

ACCESSORIES

ACCESSORIES

Installation brackets, access door and T-type EPDM gaskets

– set of installation brackets UM,
– access door AD,
– T-type EPDM gaskets,

Microswitches

– microswitch indicating "closed" position 1WKK,
– microswitch indicating "open" position 1 WKP,
– microswitches indicating "open" and "closed" position 1WKKP,

Microswitches, electromagnet and actuator

– electromagnet de-energized EP,
– electromagnet impulse EI,
– actuator FDG-5,
– actuator FDG-8.

EMS Module

Easy Maintenance System module guarantee quick and correct connection of the portable TZ tester that enables delivery of suitable control – impulse or deenergizing of a selected voltage – 24 V or 230 V, in purpose of functionality assessment during the installation work, commissioning process of the installation and during normal management of the building. Use of the EMS system together with the TZ tester speeds up commissioning of the installation considerably and leaves no doubt as regards to its correct performance.

ELECTRICAL WIRING DIAGRAM

CHARACTERISTICS OF ELECTRO-MAGNET				
Supply voltage	24 lub 48 V DC impulse	230 V AC impulse	24 lub 48 V DC de-energized	230 V AC de-energized
Power input	3,5 W	5,5 VA	1,6 W	4 VA

CHARACTERISTICS OF ACTUATOR	**FDG-WT-5-230**	**FDG-WT-5-24**
Supply voltage [V]	230V AC	24V AC/DC
Power input during tensioning the spring [W]	4 W	4 W
Power input during stand-by [W]	1 W	1 W
Time of movement – engine [s]	<40 s	<40 s
Time of movement – spring [s]	<20 s	<20 s
Torque motor [Nm]	>3 Nm	>3 Nm
Protection class IP	IP54	IP54
Sound power level – actuator dB(A)	<45 dB(A)	<45 dB(A)
Sound power level – spring dB(A)	<65 dB(A)	<65 dB(A)

CHARACTERISTICS OF ACTUATOR	**FDG-WT-8-230**	**FDG-WT-8-24**
Supply voltage [V]	230V AC	24V AC/DC
Power input during tensioning the spring [W]	9,2 VA	3,5 W
Power input during stand-by [W]	6,9 VA	0,5 W
Time of movement – engine [s]	55-71 s	55-71 s
Time of movement – spring [s]	21 s	21 s
Torque motor [Nm]	8 Nm	8 Nm
Protection class IP	IP54	IP54
Sound power level – actuator dB(A)	47 dB(A)	47 dB(A)
Sound power level – spring dB(A)	52 dB(A)	52 dB(A)

ELECTRICAL WIRING DIAGRAM

Damper with FDG-WT-8 actuator or FDG-WT-5*

Optional actuators: FDG-WT-8-24, FDG-WT-8-230, FDG-WT-5-24* and FDG-WT-5-230*.

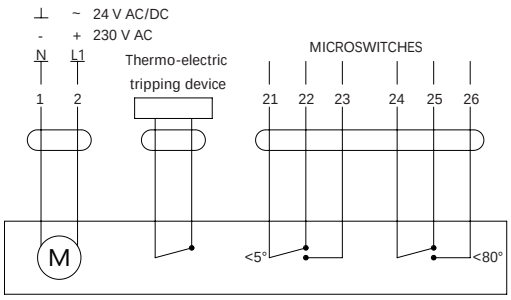

Damper with mechanism H

Optional actuators: FDG-8-24, FDG-8-230, optional electromagnets: EI24, EI230, EP24 or EP230.

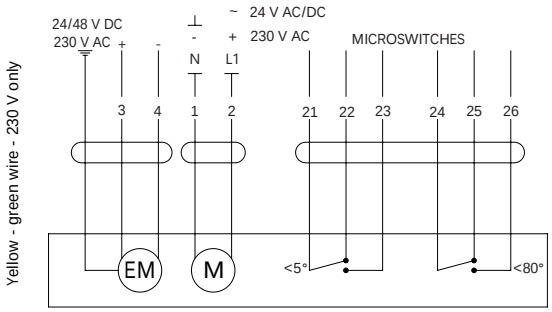

Damper with FDG-WT-8 actuator and EMS or FDG-WT-5* and EMS

Optional actuators: FDG-WT-8-24, FDG-WT-8-230, FDG-WT-5-24* and FDG-WT-5-230*.

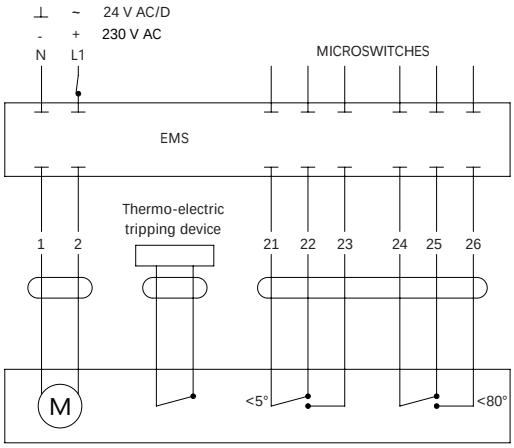

Damper with mechanism H and EMS

Optional actuators: FDG-8-24, FDG-8-230, optional electromagnets: EI24, EI230, EP24 or EP230.

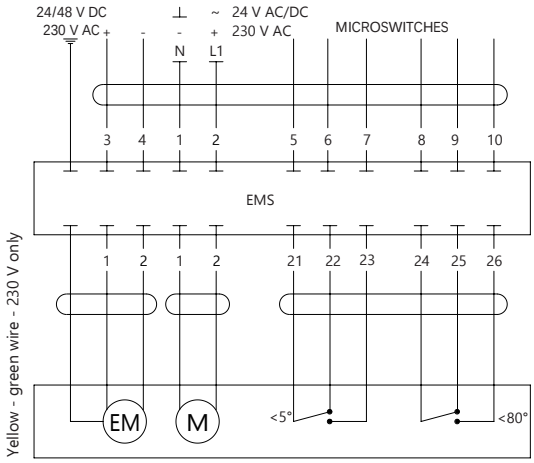

*FDG-WT-5-24 and FDG-WT-5-230 actuators are applicable for all sizes of CX-5 fire dampers.

EXAMPLE OF SPECIFICATION AND PURCHASE ORDER

Enquiry:
Fire damper EIS120 GRYFIT CX-5, D=400 + Actuator 24/48V AC/DC FDG-WT-8-24 + Module EMS +EPDM gaskets

GRYFIT quotation:
GRYFIT CX-5, D=400 + FDG-WT-8-24 + EMS + EPDM gaskets T

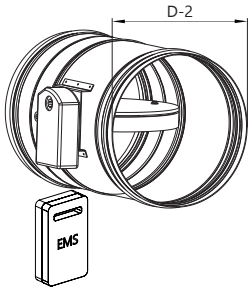

Enquiry:
Fire damper EIS120 GRYFIT CX-5, D=400 + Compact microswitches indicating open and closed position + EPDM gaskets

GRYFIT quotation:
GRYFIT CX-5, D=400 + 1WKKP + EPDM gaskets T

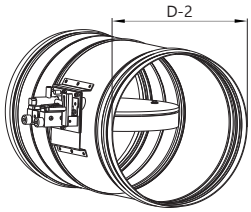

Design changes reserved. All rights reserved.© GRYFIT air handling intelligence - CX-5-17.06-B.5-ENG