T-Pieces TCPU:

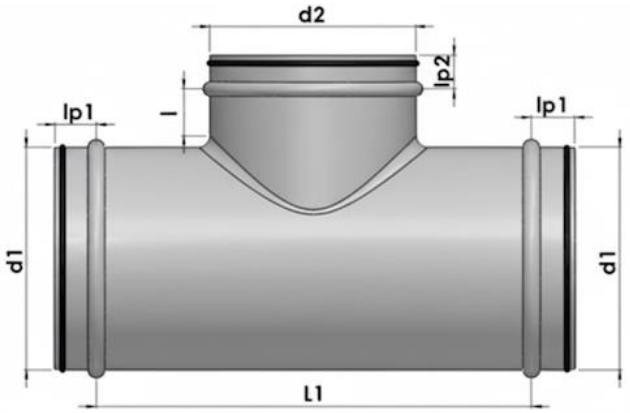

d1 – nominal diameter
d2 – branch nominal diameter
l – branch length
lp – coupling length
L1 – overall length, L1 = d2+120 mm, l = 60 mm for d1 ≤ 315 mm; L1 = d2+160 mm, l = 80 mm for d1 > 315 mm:

d1, mm	d2, mm	L1, mm	l_p, mm	d1, mm	d2, mm	L1, mm	l_p, mm
100	100	220	33	500	500	660	55
125	125	245		560	560	720	
160	160	280		630	630	790	
200	200	320		710	710	870	
250	250	370		800	800	960	
315	315	435		900	900	1060	100
355	355	515	55	1000	1000	1160	
400	400	560		1120	1120	1280	
450	450	610		1250	1250	1410	

- Manufactured from:
  - galvanized sheet steel DX51D+Z275 / S220GD+Z275 (LST EN 10346)
  - stainless steel sheet EN 1.4404 (LST EN 10028-7) – AISI 316
  - “Aluzinc” sheet steel DX51D+AZ185 (LST EN 10346)
- Couplings are equipped with EPDM gaskets featuring a special coating to facilitate installation
- Comply with the requirements of LST EN 1506 standard
- Properly installed systems comply with air-tightness class C (tested according to LST EN 12237 standard)
- Complies with reaction-to-fire class A1 according to LST EN 13501-1 standard

We reserve the right to adjust the information without prior notice, last updated 2025-10